5.Superconducting Qubits

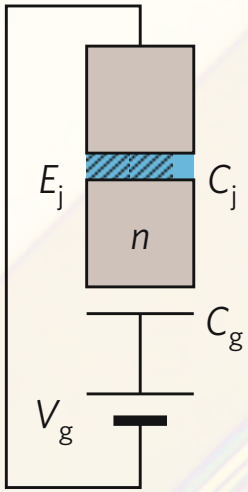

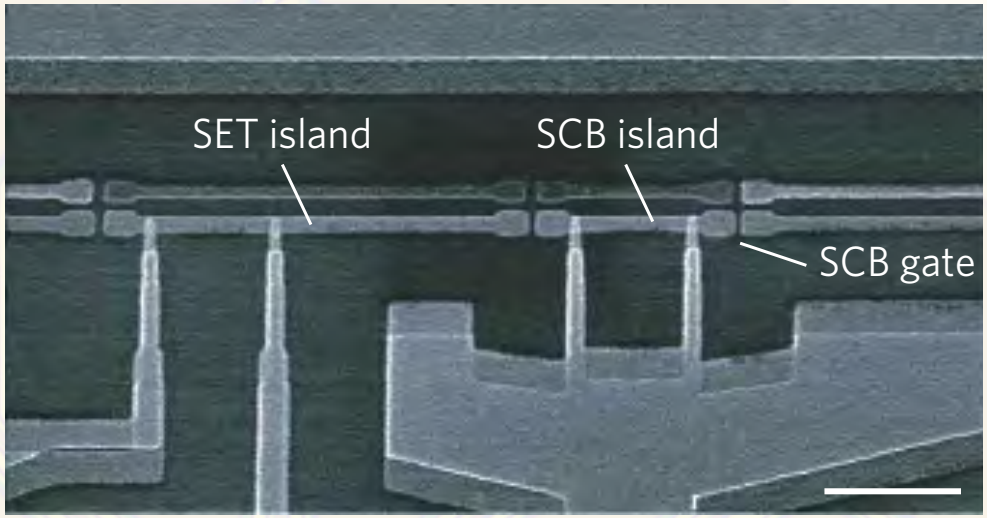

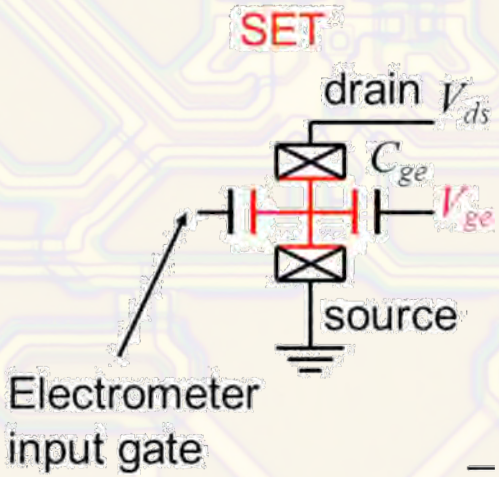

5.Superconducting Qubits

Cooper pair box energy dispersion

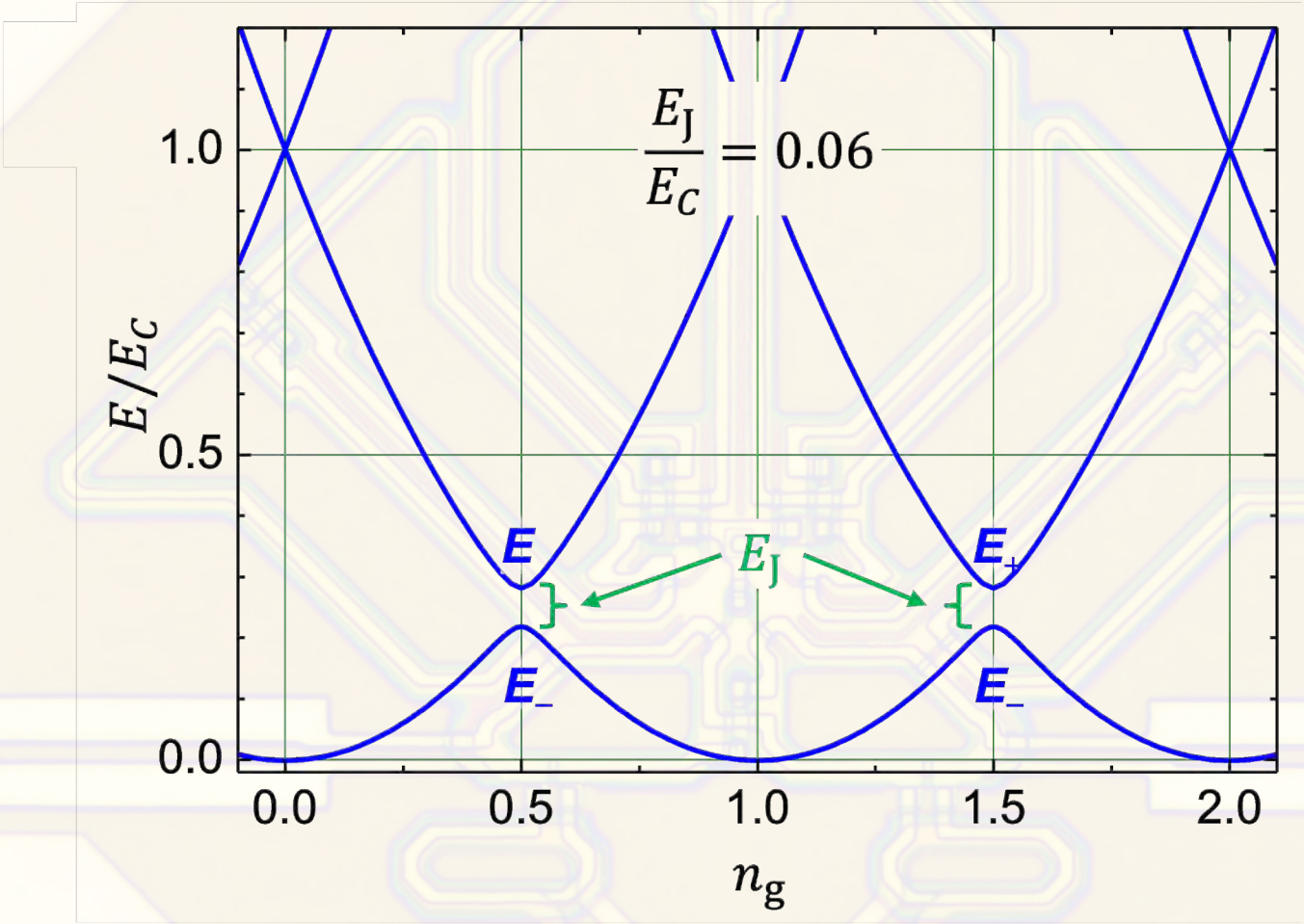

5.Superconducting Qubits

Cooper pair box energy dispersion

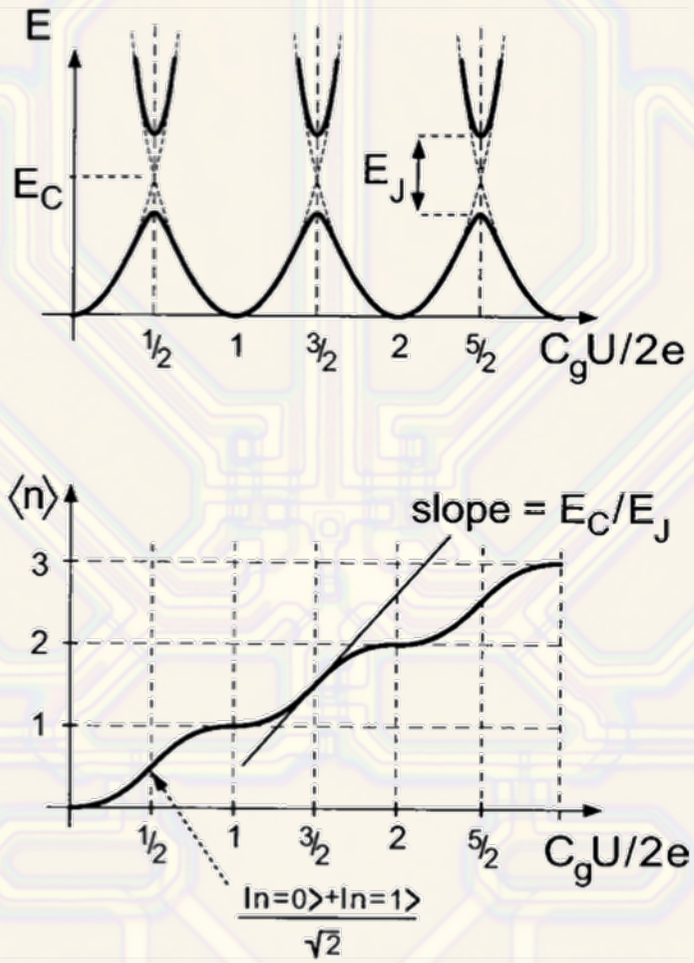

5.Superconducting Qubits

Cooper pair box Rabi-Oszillations

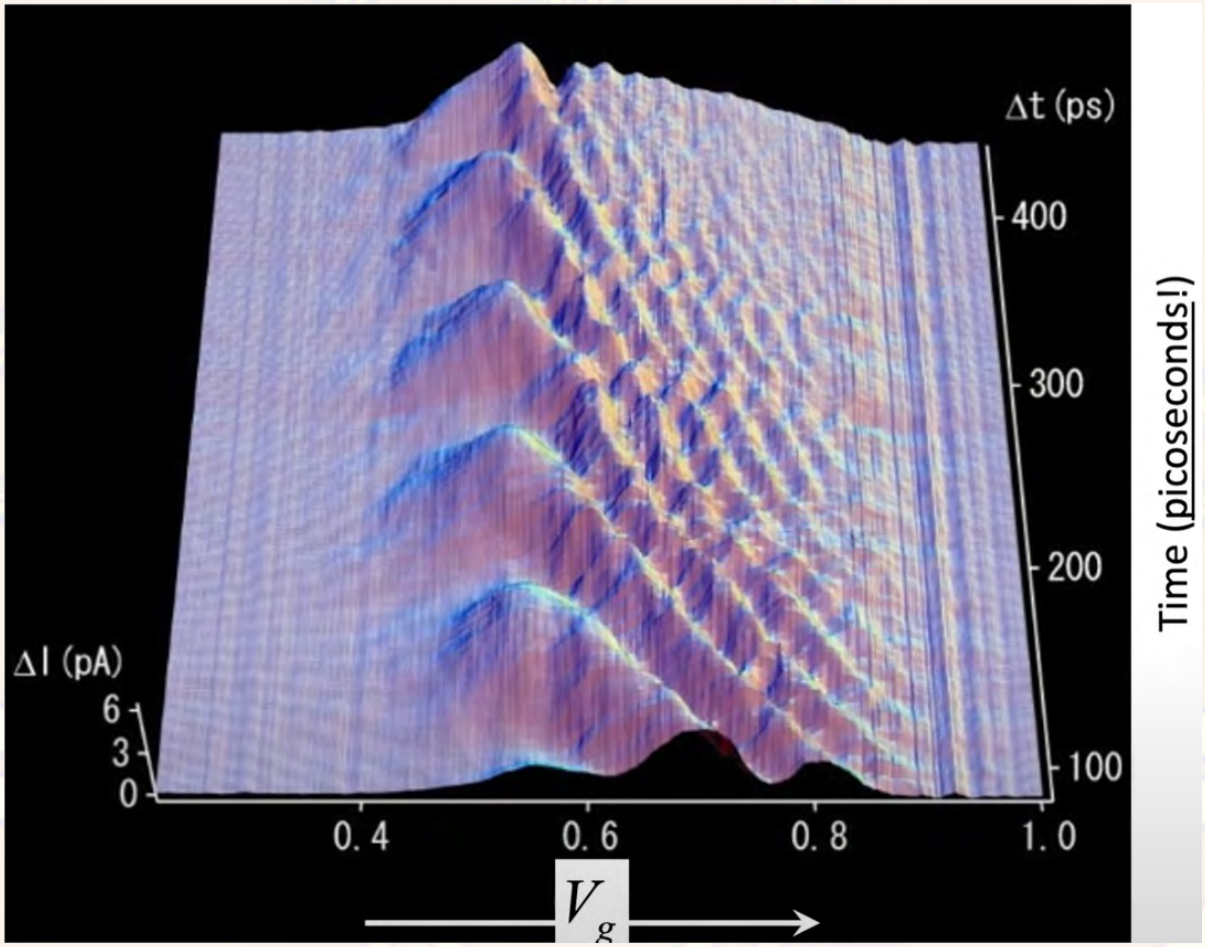

5.Superconducting Qubits

Transmission-line resonator

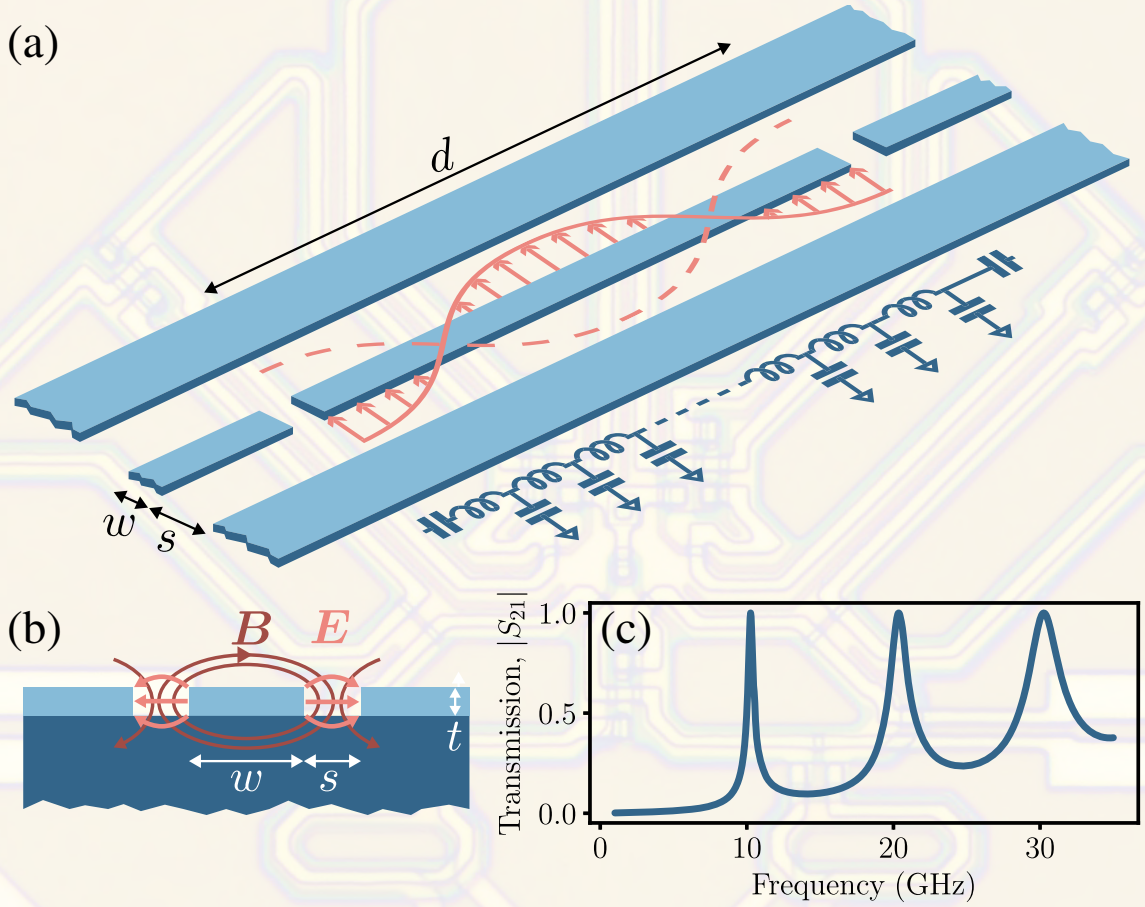

5.Superconducting Qubits

Transmon

2d transmon

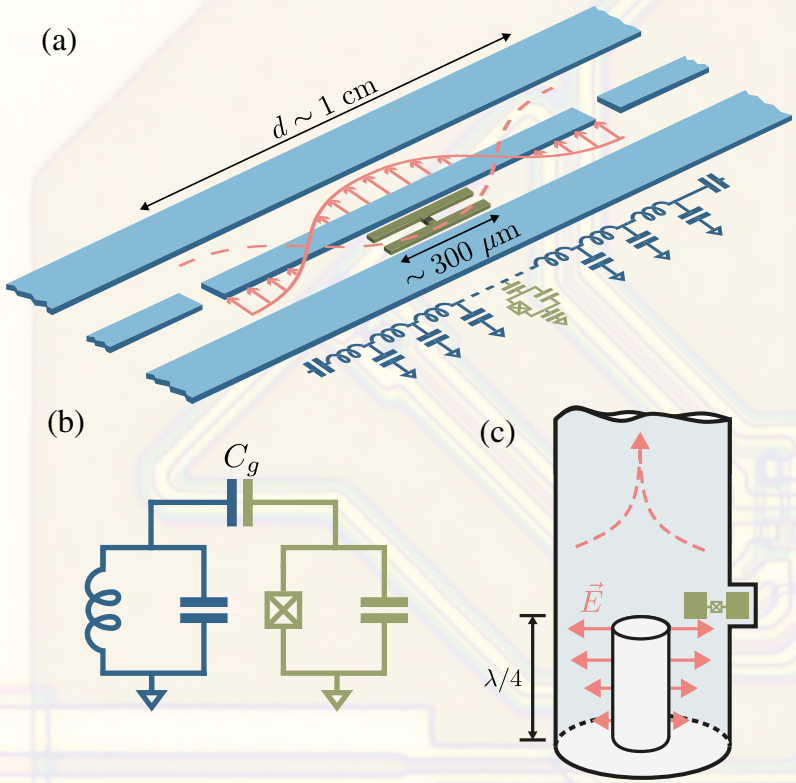

Energy dispersion

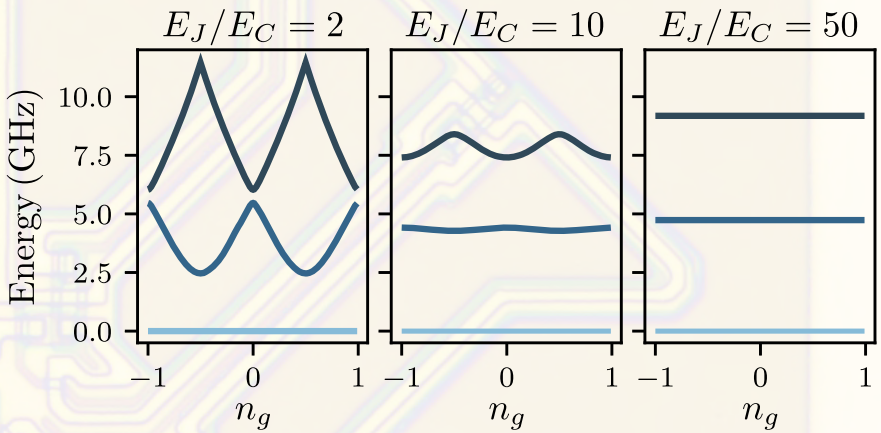

3d transmon

5.Superconducting Qubits

Wiring of transmon qubits

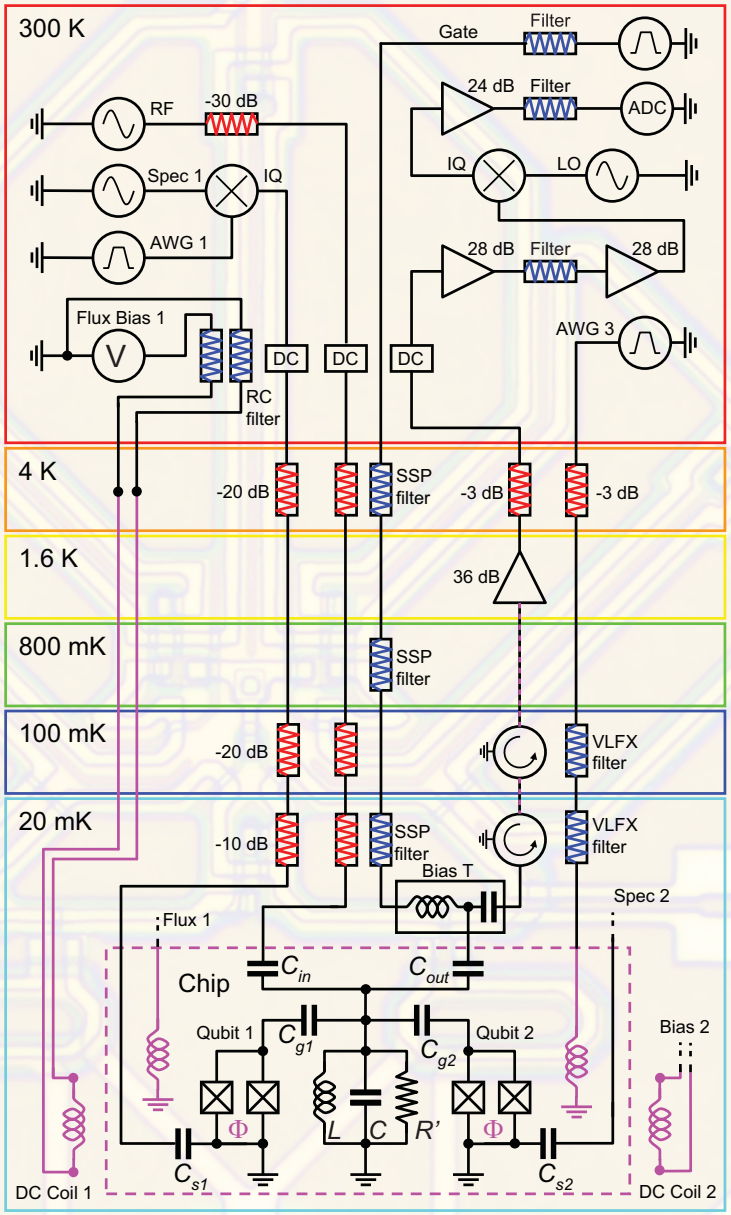

5.Superconducting Qubits

Readout of 3d transmon qubits

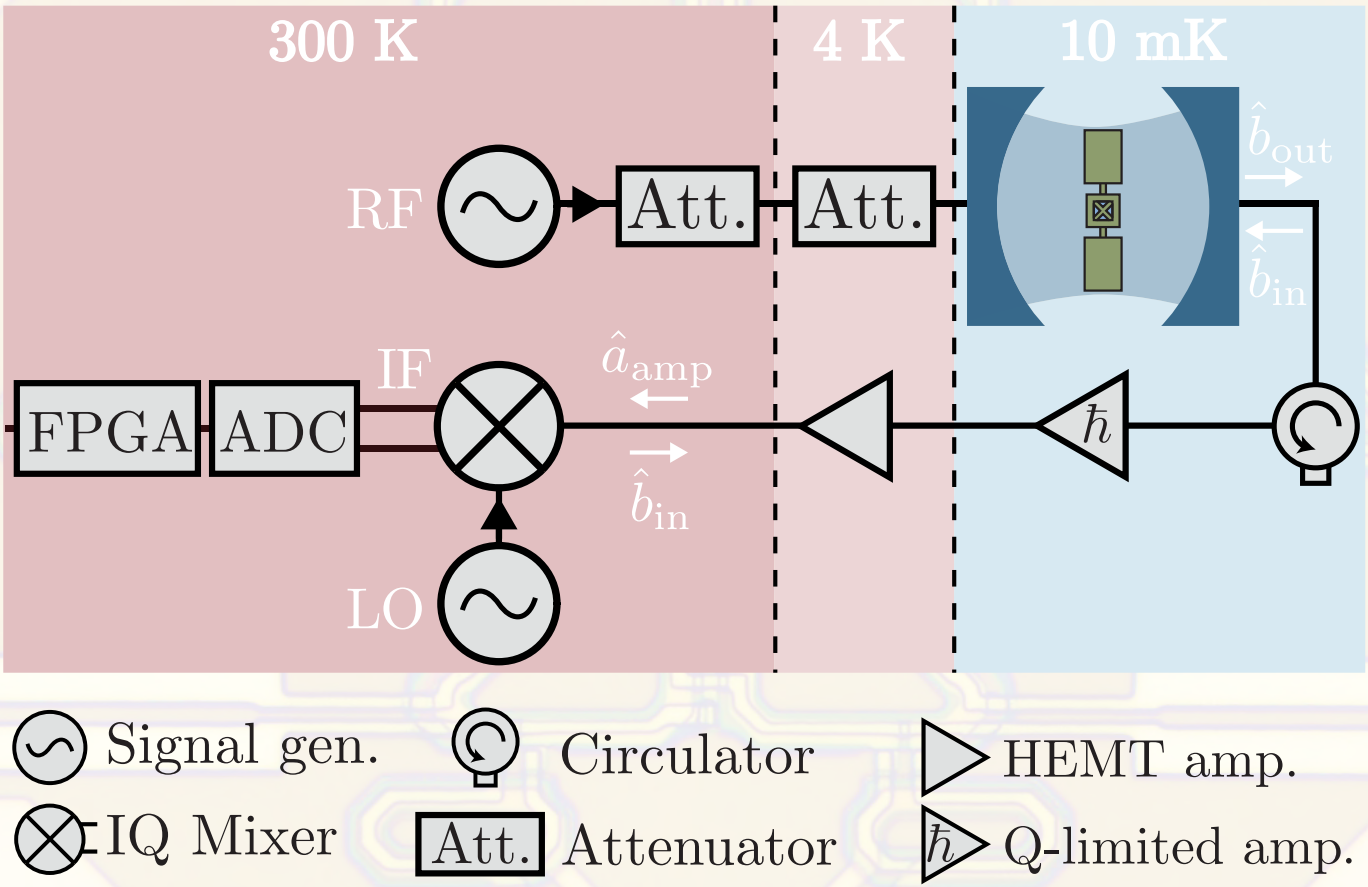

5.Superconducting Qubits

Transmon

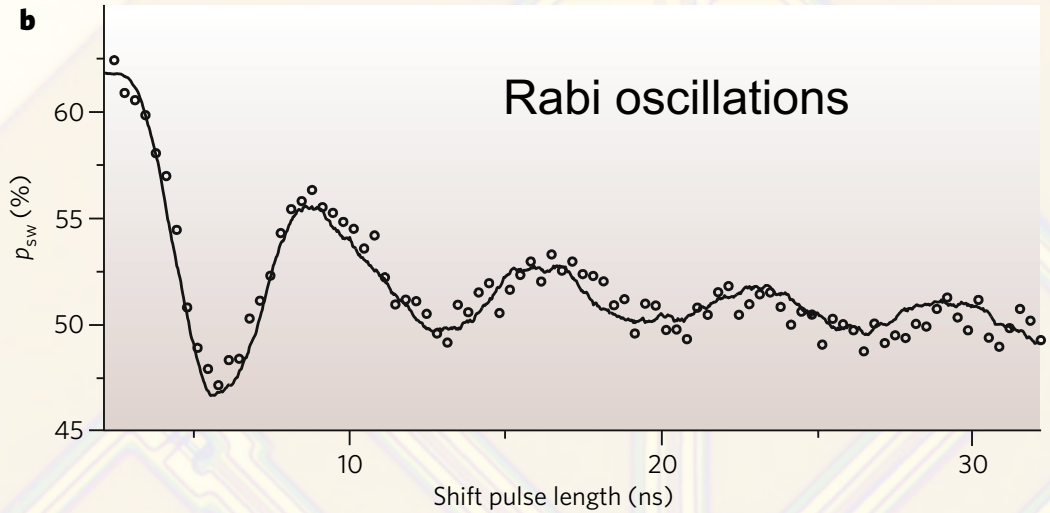

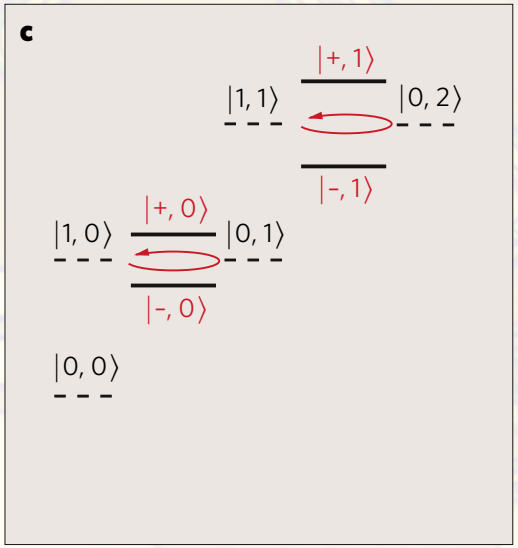

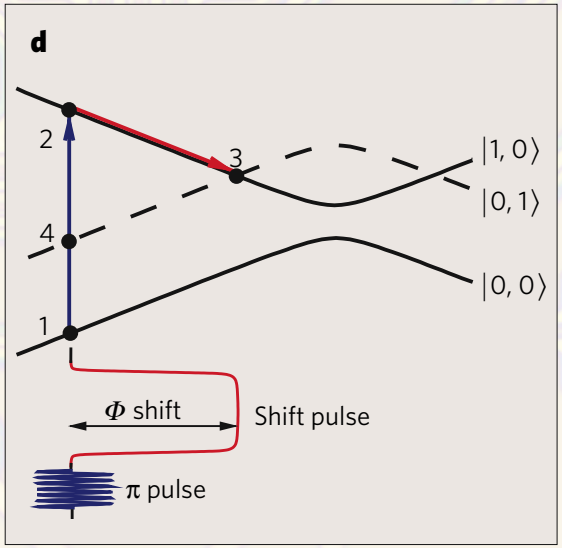

5.Superconducting Qubits

Four-Transmon chip

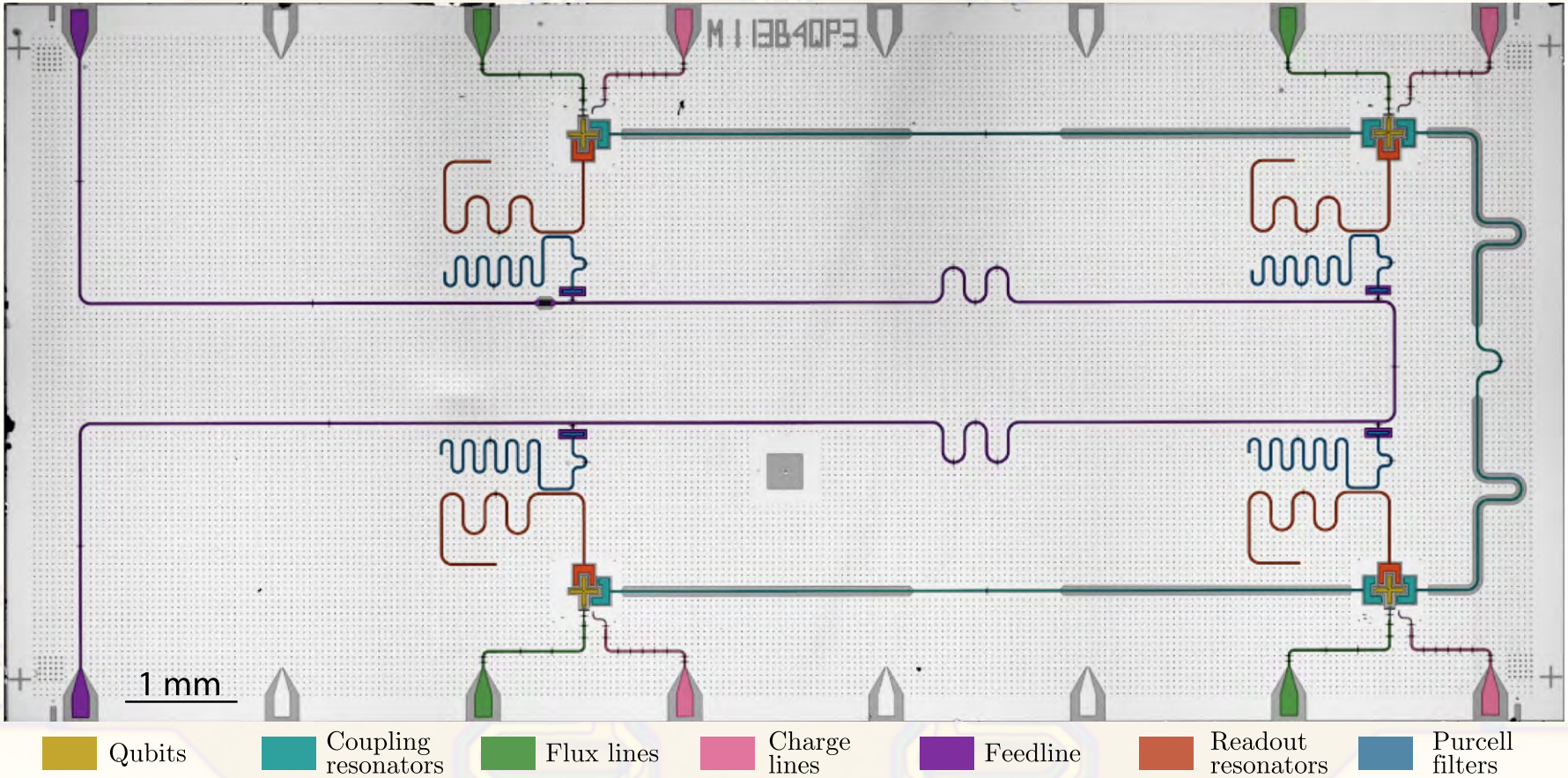

5.Superconducting Qubits

Quadrontium: Hybrid of flux qubit and Cooper pair box

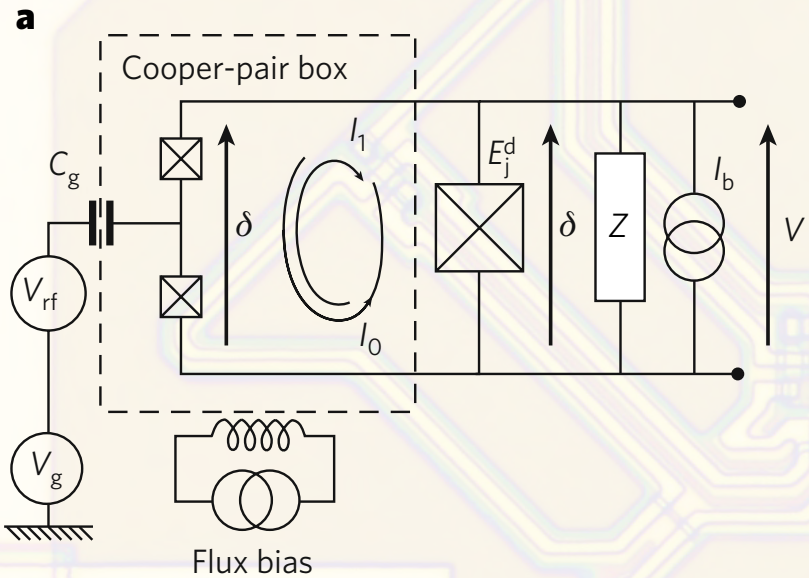

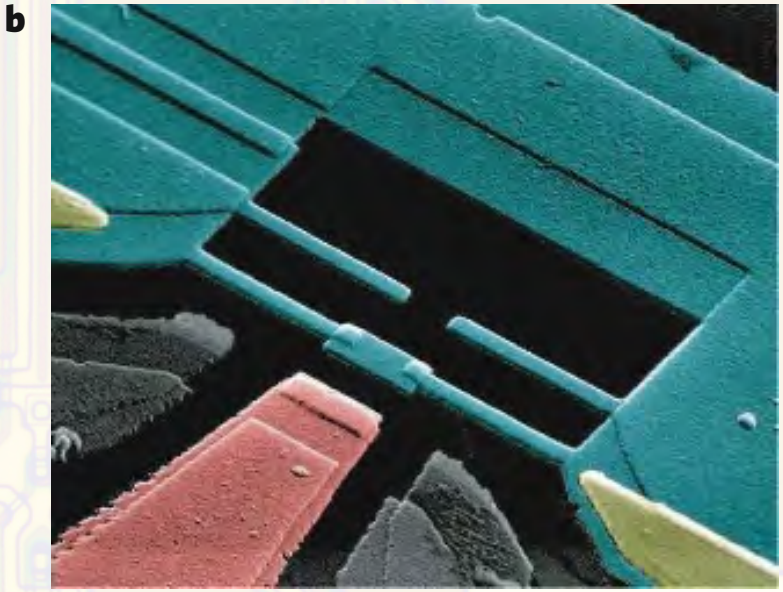

5.Superconducting Qubits

Quadrontium: Hybrid of flux qubit and Cooper pair box

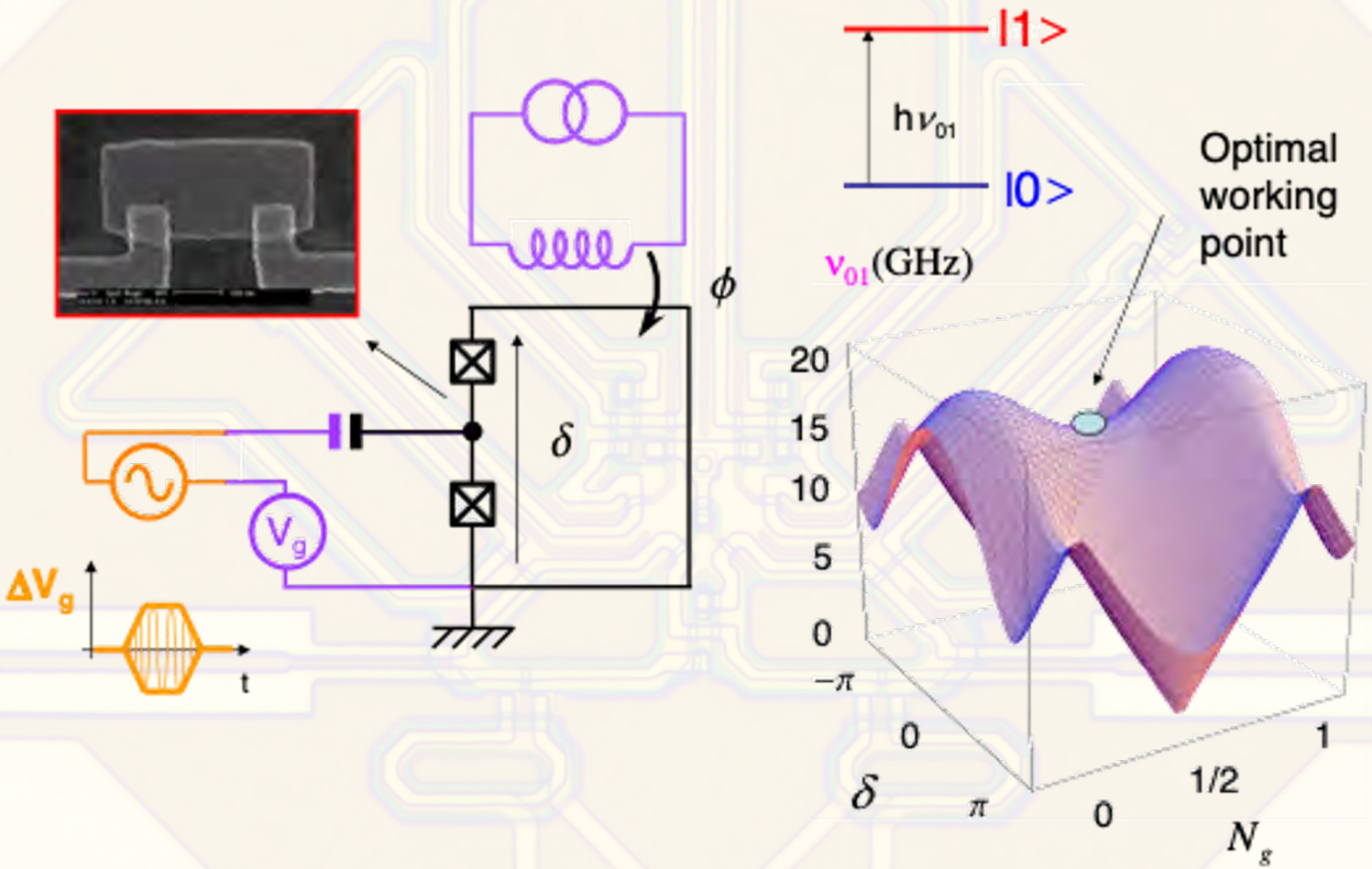

5.Superconducting Qubits

Quadrontium: Hybrid of flux qubit and Cooper pair box

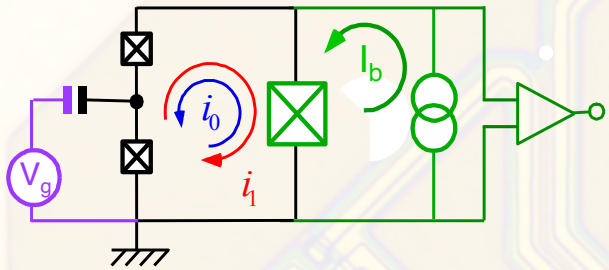

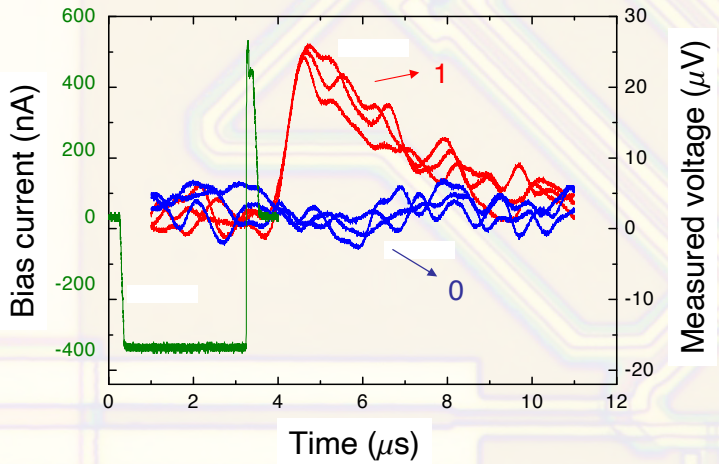

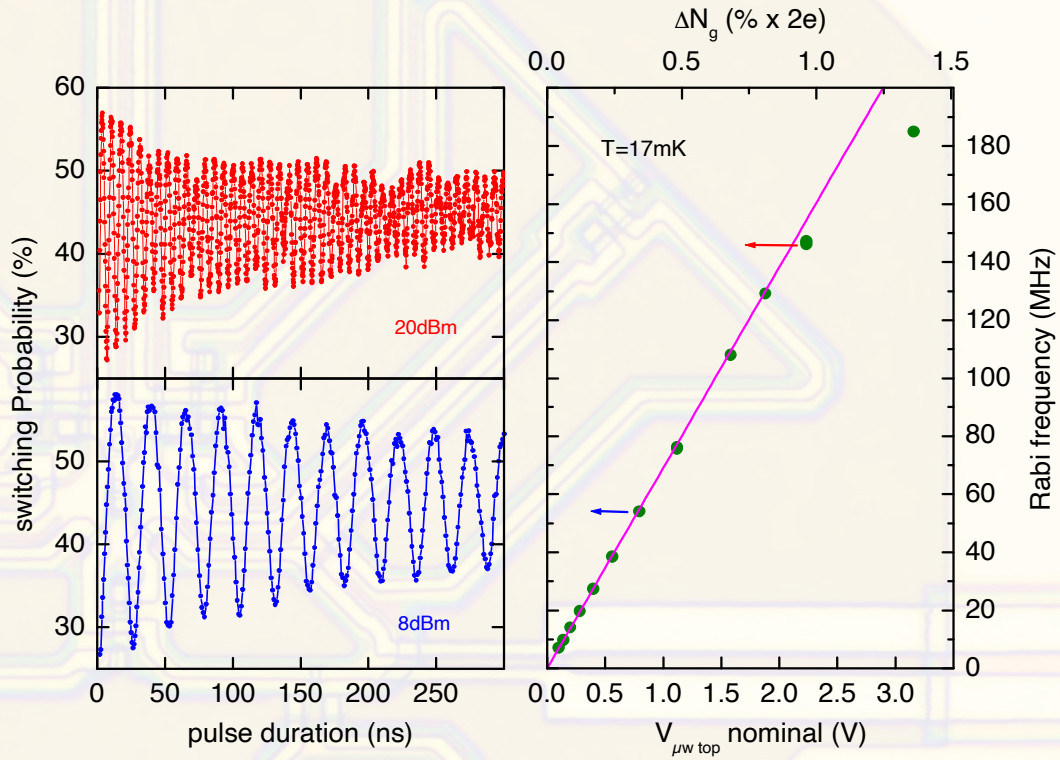

5.Superconducting Qubits

Quadrontium: Noise

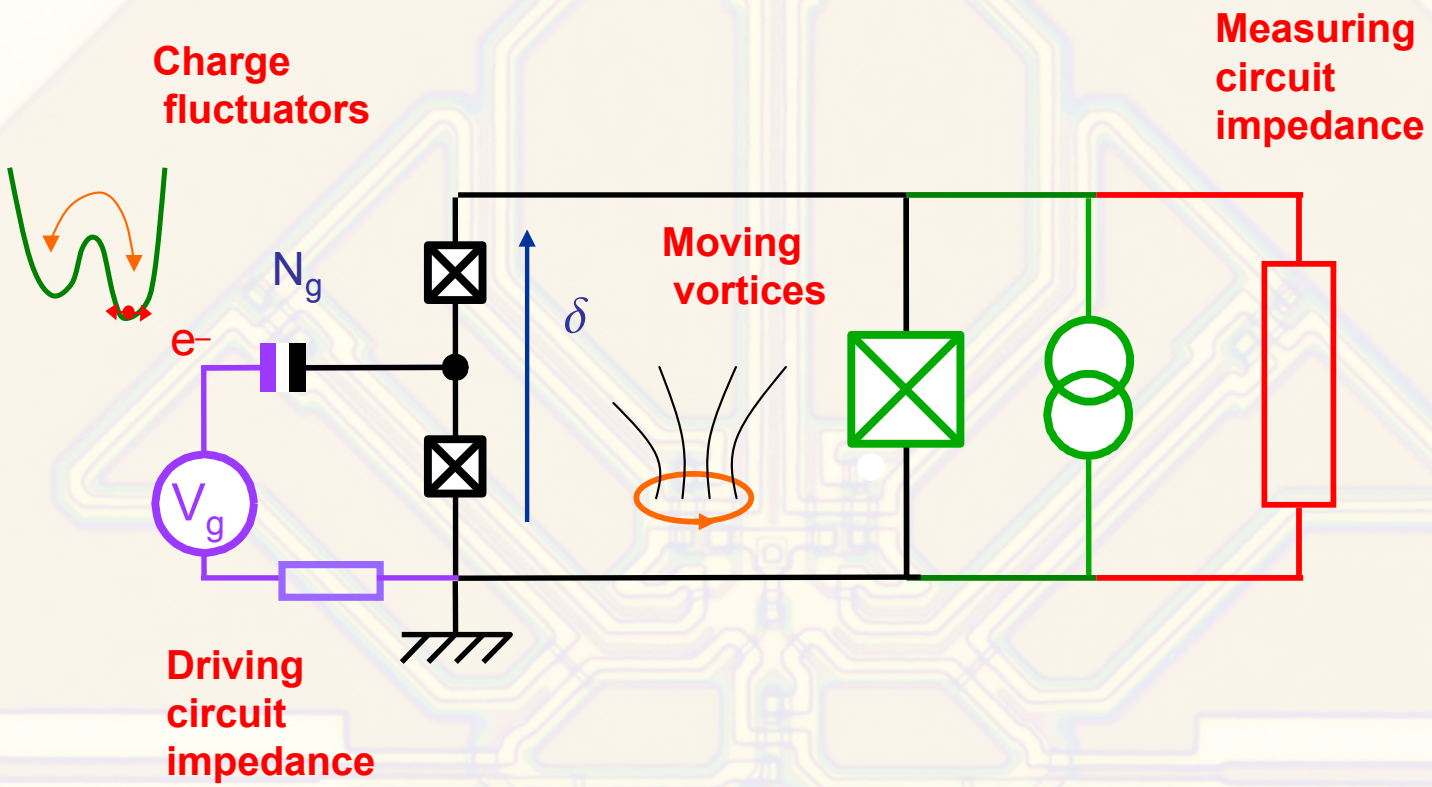

5.Superconducting Qubits

Noise arising from atomic tunneling systems

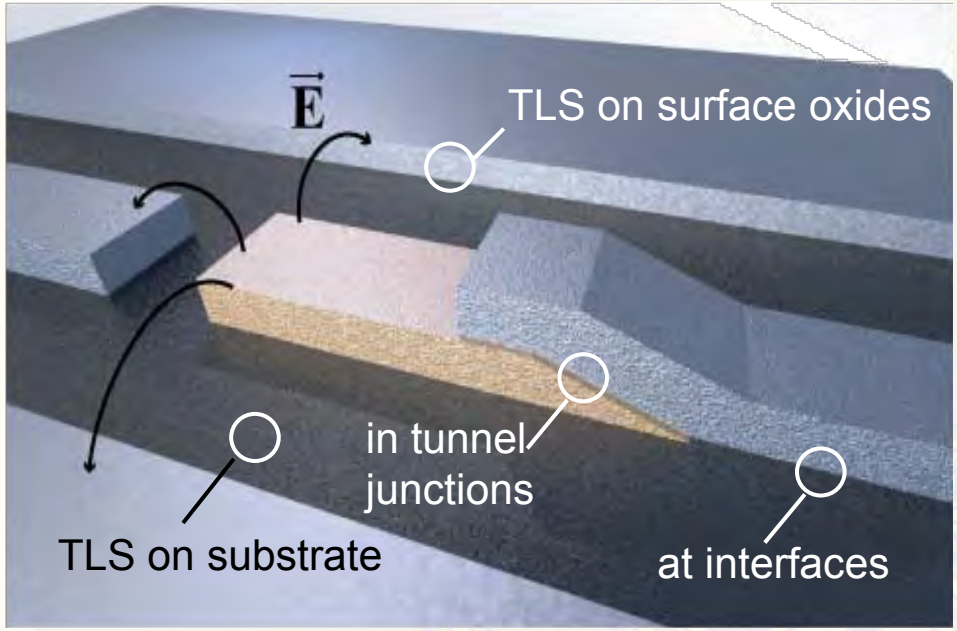

double-well potential

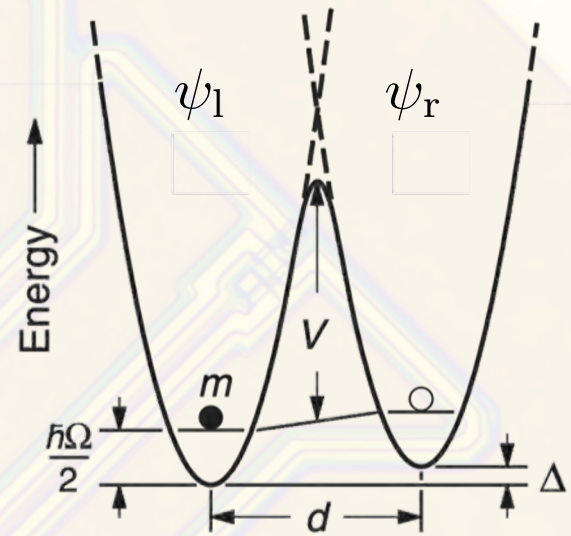

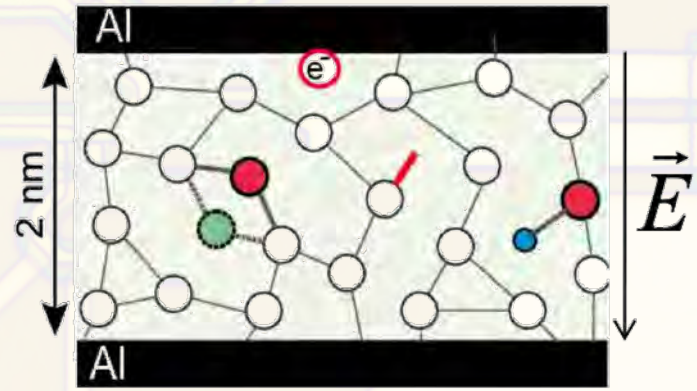

5.Superconducting Qubits

Flux qubit

- complete circuit

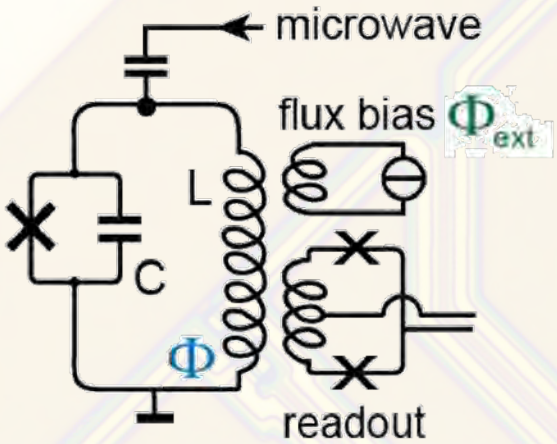

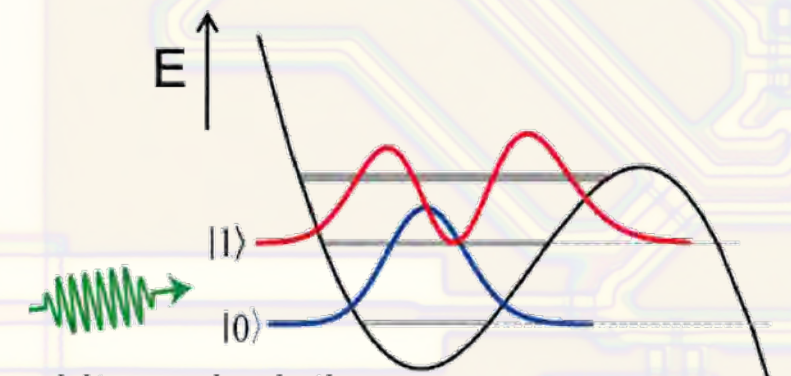

qubit manipulation
via Rabi oscillation

- **Hamilton-Operator**

$$\hat{H} = \frac{\hat{Q}^2}{2C} + \frac{\hat{\Phi}^2}{2L} - E_J \cos\hat{\varphi}$$

$\Phi_{ext} \approx 0.9\ \Phi_0$ $\qquad$ $E_J / E_C \approx 10^4$

- **Potential** for $E_J >> E_C$:

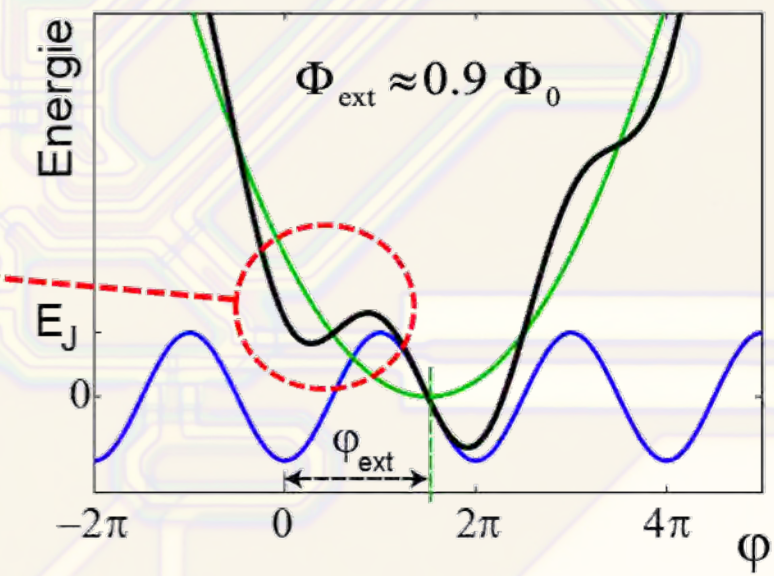

5.Superconducting Qubits

Frequency Domain:
defects cause avoided level crossings

Time Domain:
energy oscillates between qubit and defects

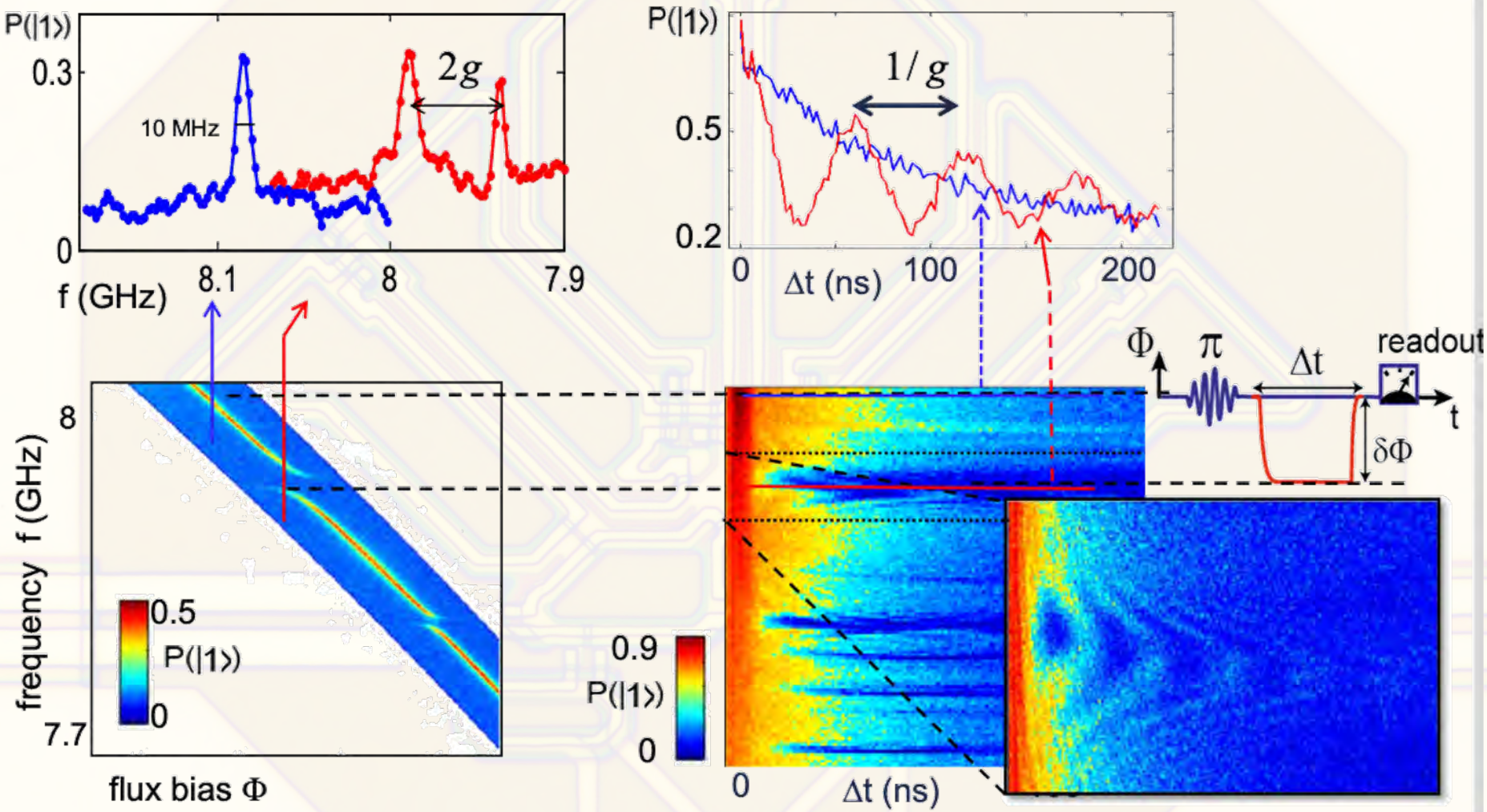

5.Superconducting Qubits

possible structural configurations with atomic tunneling systems

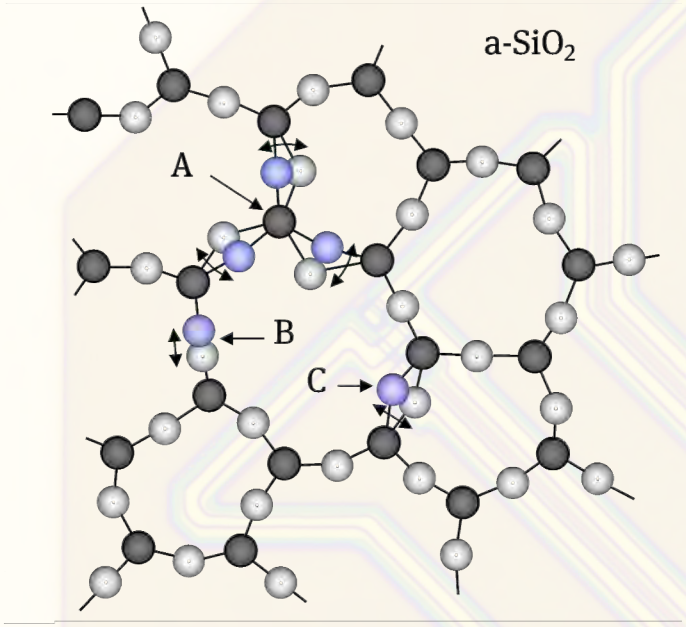

double-well potential

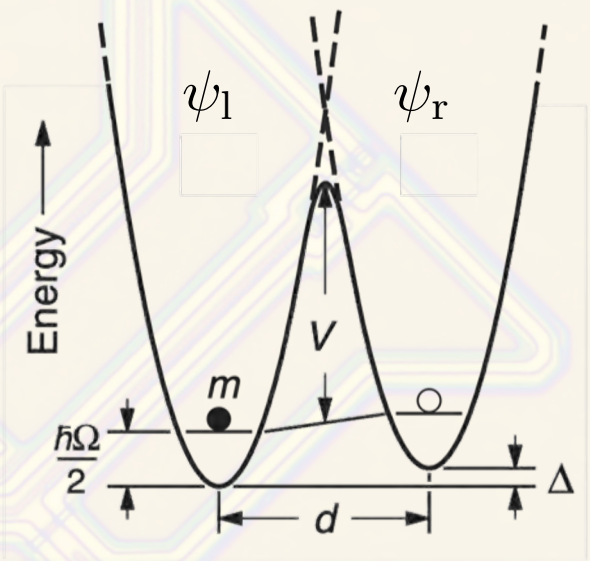

typical values: $\Delta / k_B < 10$ K

$d \sim 1$ Å

$\hbar\Omega / k_B \sim 300$ K

$V / k_B < 1000$ K

5.Superconducting Qubits

atomic tunneling systems

pure tunneling: $E = \Delta_0$

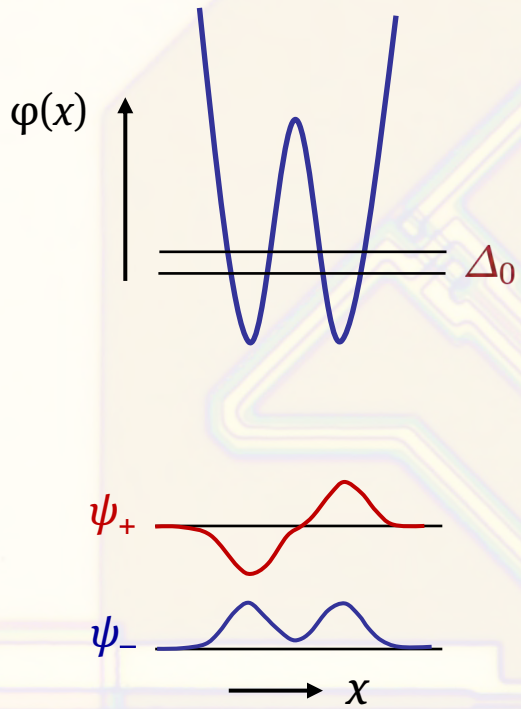

classical asymmetry energy Δ

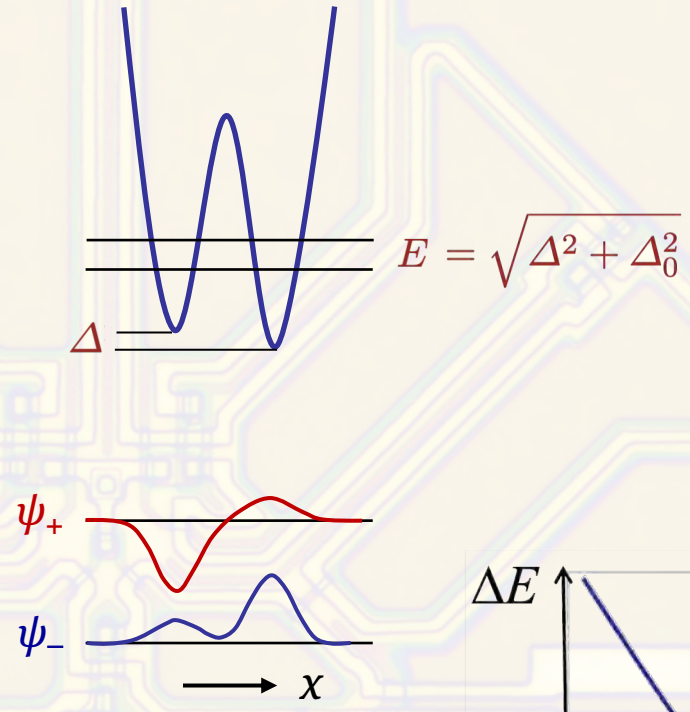

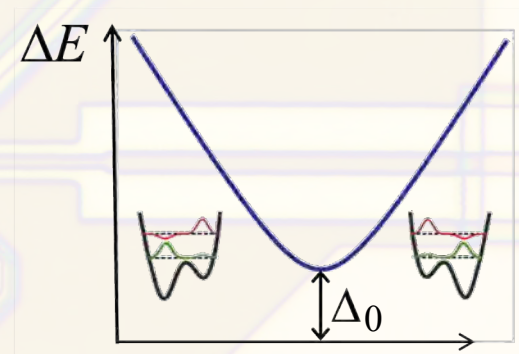

asymmetry energy Δ

coupling to external fields

$$\delta\Delta = 2\gamma e$$

$$\delta\Delta = 2\boldsymbol{p}\cdot\boldsymbol{F}$$

5.Superconducting Qubits

TLS strain tuning by deforming the sample using a piezo

- tiny deformations

$$\frac{\Delta L}{L} \approx 10^{-7}\,/\mathrm{V}$$

(compress 1 nm by 10^{-16} m)

change TLS asymmetry:

$$\varepsilon \approx 200\,\mathrm{MHz/V}$$

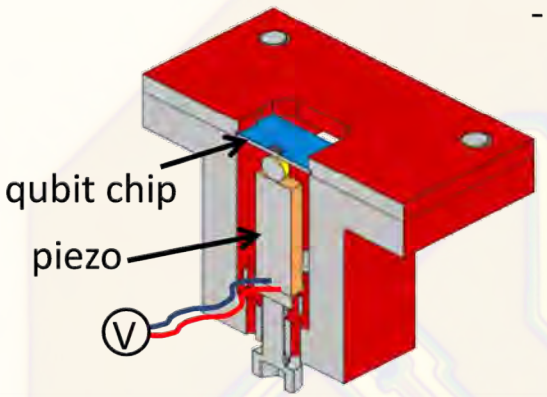

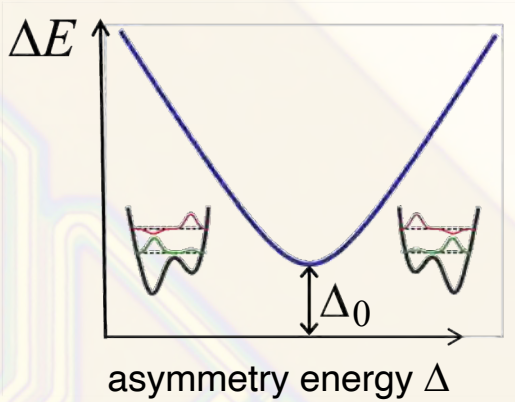

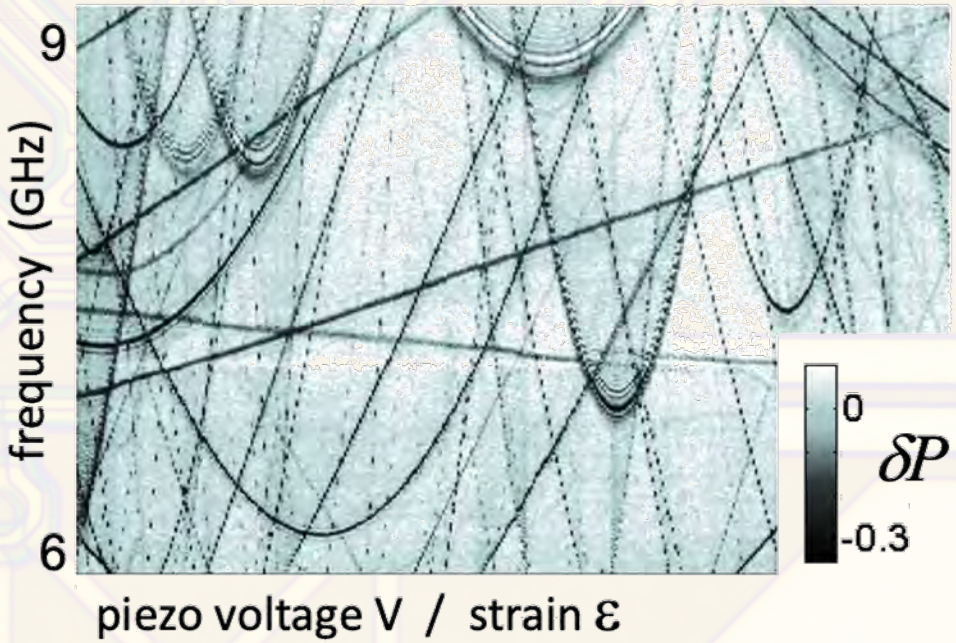

5.Superconducting Qubits

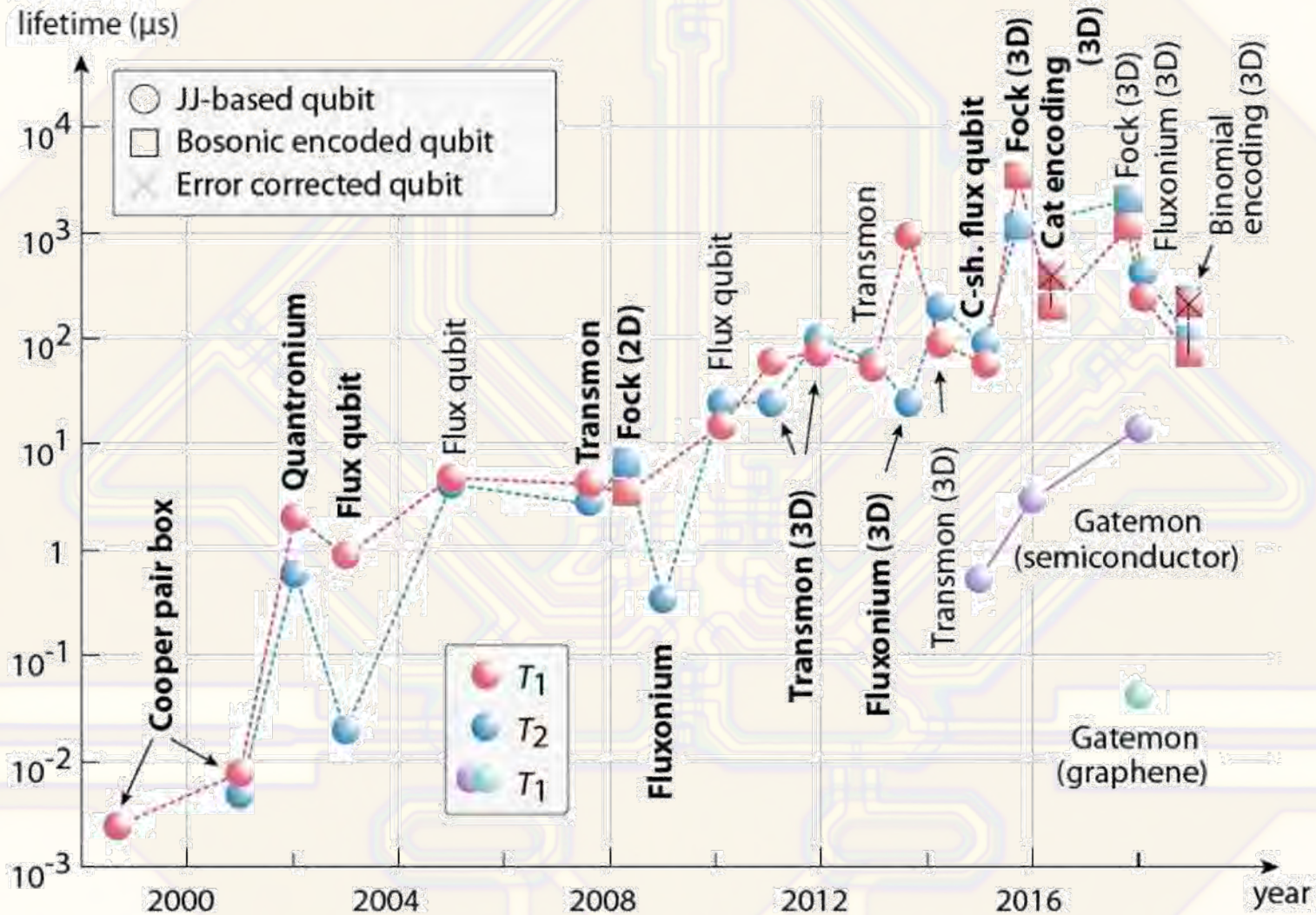

5.Superconducting Qubits

Two qubits gate operations

Year	Gate type	Fidelity (%)	Gate time
2009	CZ gate [70]	87	NON
2010	iSWAP gate [84]	78	NON
2011	CR gate [85]	81	220 ns
2012	$\sqrt{b\text{SWAP}}$ gate [86]	86	800 ns
2012	$\sqrt{i\text{SWAP}}$ gate [87]	90	31 ns
2013	CZ gate [88]	87	510 ns
2013	CNOT gate [56]	93.47	420 ns
2014	CZ gate [25]	99.44	43 ns
2014	CZ gate [33]	99.07	30 ns
2016	CR gate [74]	99	160 ns
2016	CZ gate [81]	98.53	413 ns
2016	$\sqrt{i\text{SWAP}}$ gate [69]	98.23	183 ns
2017	CZ gate [89]	93.60	250 ns
2018	CZ gate [80]	95	278 ns
2018	CZ gate [90]	92	210 ns
2018	iSWAP gate [90]	94	150 ns
2018	CNOT gate [91]	89	190 ns
2018	CNOT gate [92]	79	4.6 µs
2019	CZ gate [71]	99.54	40 ns
2019	iSWAP-like gate [72]	99.66	18 ns
2020	CZ gate [78]	98.8	176 ns

5.Superconducting Qubits

Systems

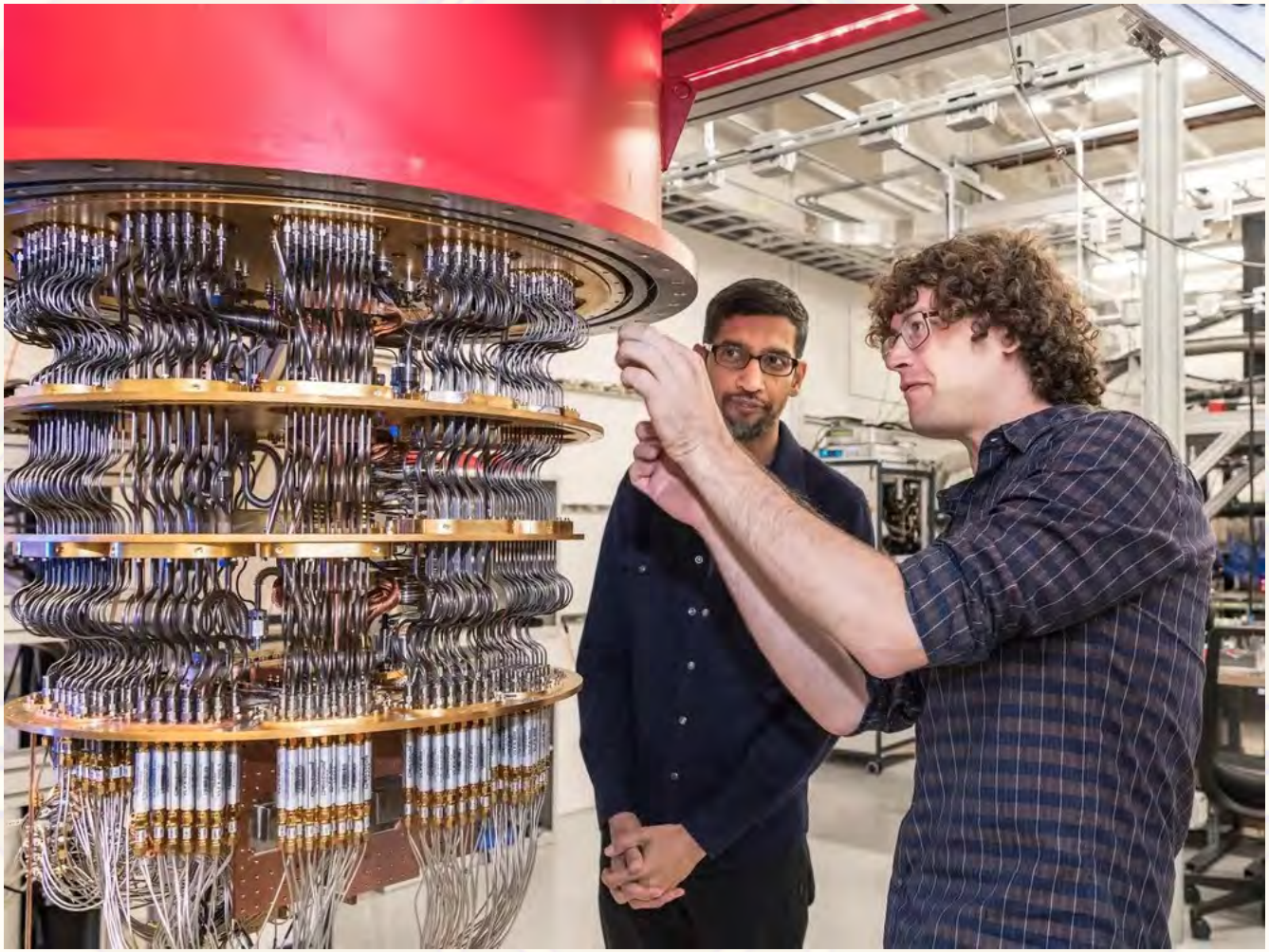

5.Superconducting Qubits

Systems